Before commencing assembly,Please read the instruction manual!

Dynam®
HIGH QUALITY RC PRODUCTS

www.dynam-rc.cn



P-51D Mustang

Instruction Manual

Specification:

Wingspan:	47 in (1200mm)
Overall Length:	41 in (1045mm)
Flying weight:	38.8oz (1100 g)
Servo:	9g 4pcs include
Battery:	3S 11.1V 2200mAh Li-Po ,20c
Speed Control:	30A brushless
Motor Size:	850Kv Brushless Outrunner
Charger :	3-cell Li-Po balancing

Warning!

SAFETY PRECAUTIONS

This radio control model is not a toy!

- First-time builders should seek advice from people having building experience in order to assemble the model correctly and to produce its performance to full extent.
- Assemble this kit only in places out of children's reach!
- Take enough safety precautions prior to operating this model. You are responsible for this model's assembly and safe operation!
- Always keep this instruction manual ready at hand for quick reference, even after completing the assembly.

Shen Zhen Dynam Industry & Trade Co.,LTD

TEL:+86-769-87566018 FAX:+86-769-87555185 E-mail:sales@dynam-rc.cn

CE 0678 FC 14+

MADE IN CHINA

Safety Precautions

- Never fly the Airplane where there are crowds of people ,power lines overhead, automobiles or near highways. give yourself plenty of room for flying, as the plane can travel at a high rate of speed. Remember you are responsible for the safety of others.
- Do not fly in strong winds.
- Do not attempt to catch the Airplane while flying.
- Children under the age of 16 should not have admission to the transmitter for the plane.
- Never leave this system unattended, with the batteries in the unit and around children. Injury can result by children turning on the transmitter or the plane.
- Keep away from the propeller at all times. The system can automatically start when the batteries are plugged in, regardless if the transmitter is in the on or off position. The propeller can cause injury!
- Before flying, always remember to turn on the transmitter first, before plugging in the battery pack. Stay clear of propeller.
- Always turn the speed controller all the way down and the switch on “OFF”.(left control stick in the down position) before starting; otherwise the propeller will start on full power when you plug the battery into the plane.
- After running the motor, disconnect the battery first before turning off the transmitter, otherwise the propeller may start at full power.
- Never leave the charger or battery near wet areas.
- Completely discharging a Li-poly battery can result in permanent damage to the cells of the battery. Therefore you must always remember to disconnect the battery after using the plane.

BEFORE YOU BEGIN

- Read through the manual before you begin, so you will have an overall idea of what to do.
- Check all parts. If you find any defective or missing parts contact your local dealer. Please DRY FIT and check for defects for all parts that will require CA or Epoxy for final assembly. Any parts you find to be defective after the gluing process may be difficult to remove for warranty replacement. The manufacturer will replace any defective parts, but will be difficult to extend to the good parts that are good before bluing to defective parts during assembly.
- Symbols used throughout this instruction manual comprise of following:



Apply epoxy glue



Assemble left and right sides the same way.


Pay close attention here!


Pliers


Ensure smooth non-binding movement while assembling.


Cut off shaded portion

How to use your dynam 2.4G rc system

* important

1:put down throttle sticker.
2:turn on transmitter power-switch.
3:please let your receiver connect with battery in 10 seconds.
4:check your protect-switch,
when protech-switch in up station,put down,release from protect.
when protech-switch in down station,put up frist,then put down again,release from protect,you can fly now.

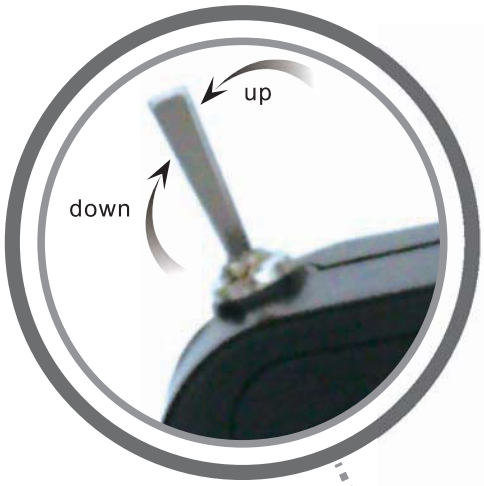

Protect-switch

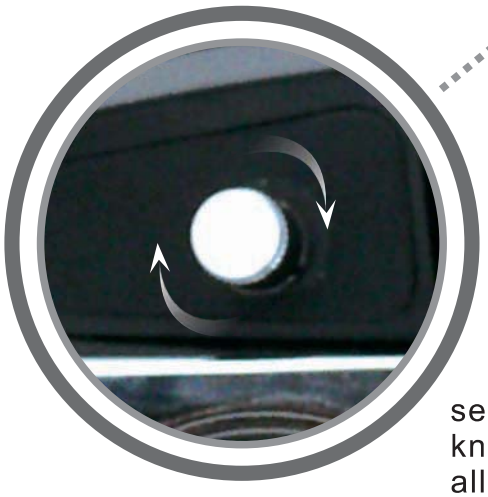

servo degree-adjust
knob clockwise,
all servo drgree augment



RTF INCLUDING

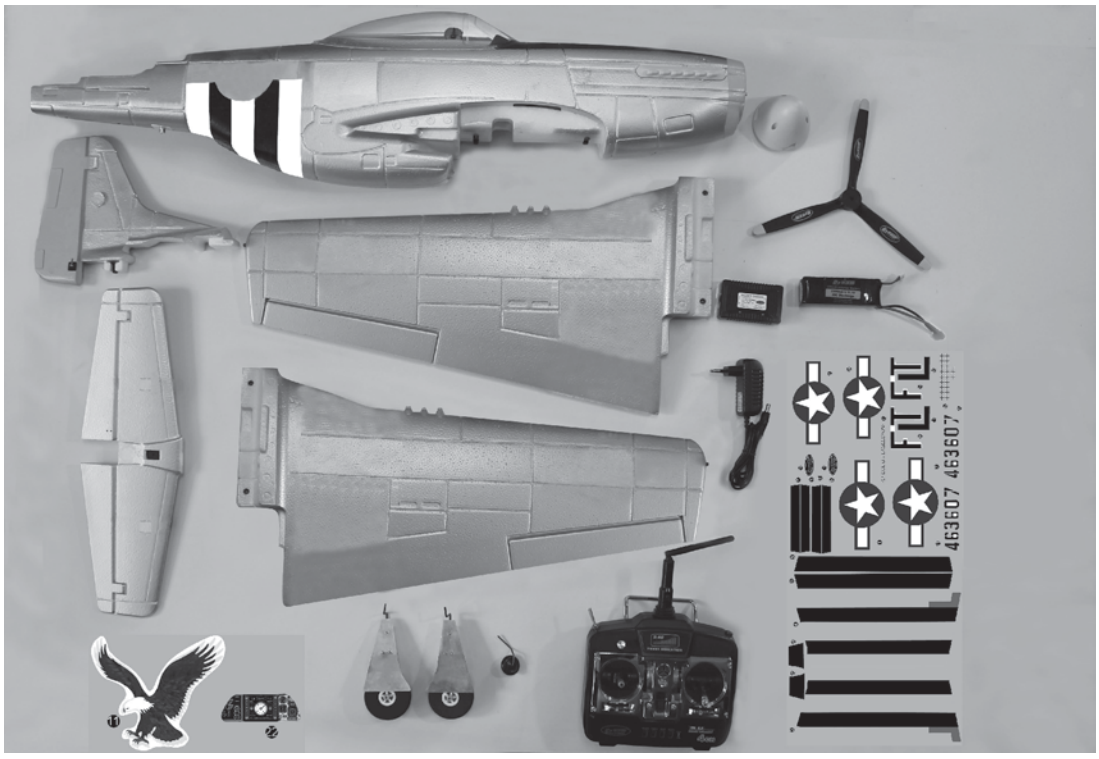

RTF including: _____

fuselage
wing
elevator
landing gear
Vertical stabilizer
Push rod
Propeller
glue
decal
balance charger
LI-Po battery (11.1V 2200mAh 20C)
transmitter
Adaptor
Spinner
ESC

Assembly

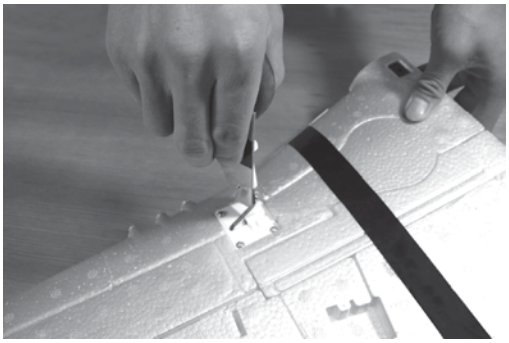

1 Apply the foam glue on the joiner of the left and right landing gear, push them in the position.

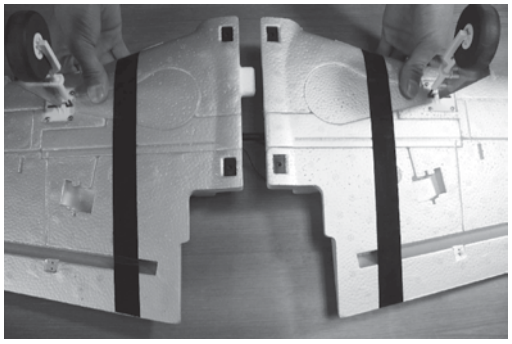

2 Insert ¢8x406mm glass fiber tube into left and right wing, and connect the wings together.

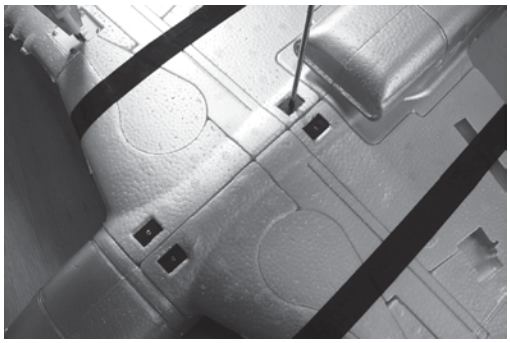

3 Fix the wing on fuselage with PA2.3*20mm screw.

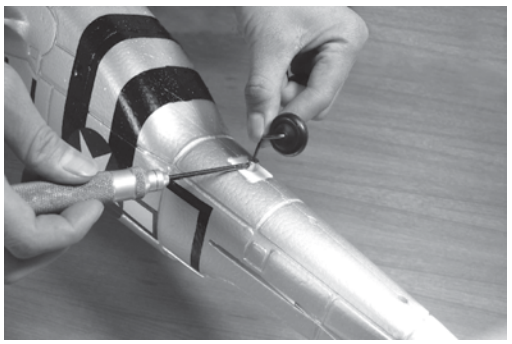

4 Fix the rear landing gear on fuselage with 1.5mm hexangular screwdriver.



5 Insert the horizontal stabilizer and vertical stabilizer in place.

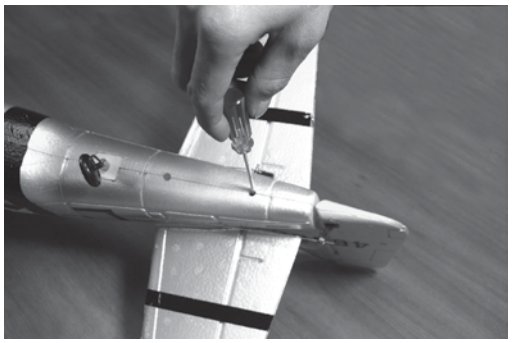

6 Fix the stabilizers with PA 2.3*20mm screw.

Assembly

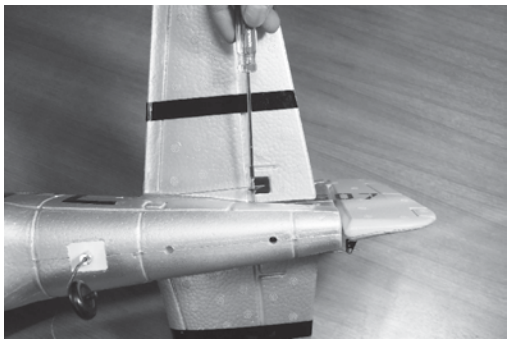

7 Insert the pushrod into elevator quick-controller and tighten the screw(the servo should be in center position).



8 Repeat the steps for the rudder.

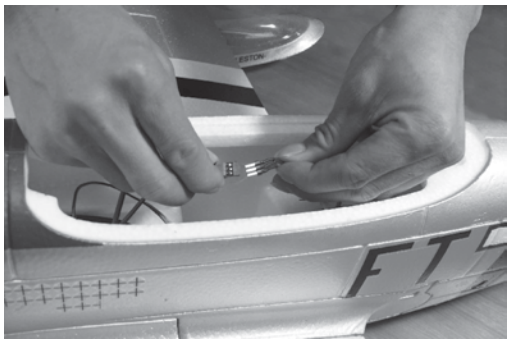

9 Connect the aileron servos with Y wires.



10 Install the propeller.

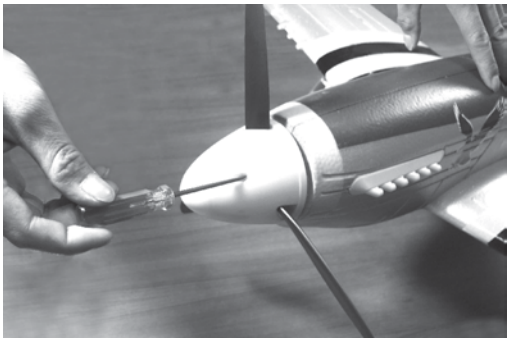

11 Install spinner with PA2.5*8mm screws.

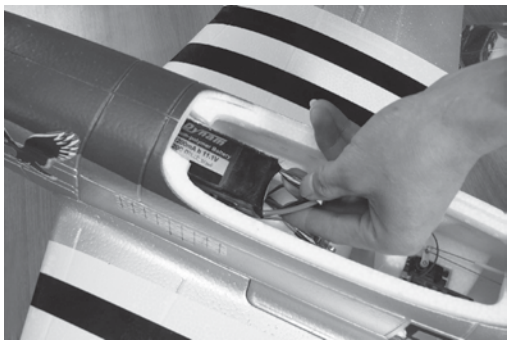

12 Put the battery in position.

STICK OPERATION

MODE 1	MODE 2	MOVEMENT
THROTTLE		
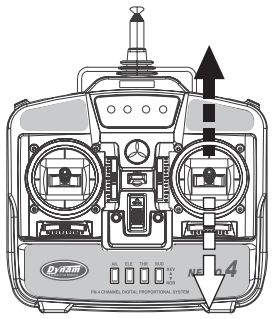	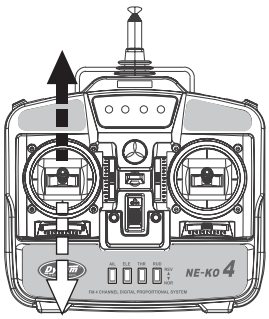	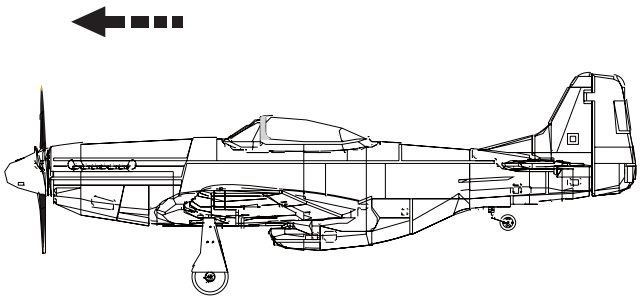
RUDDER		
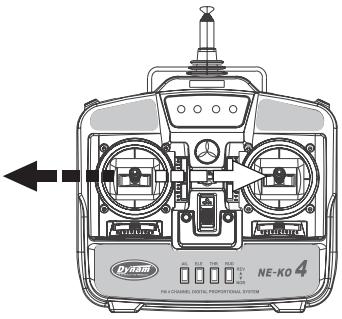	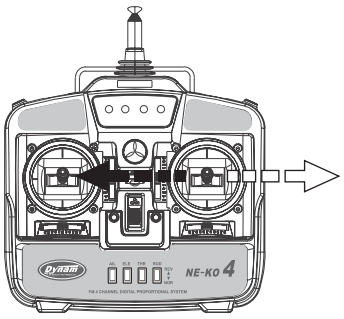	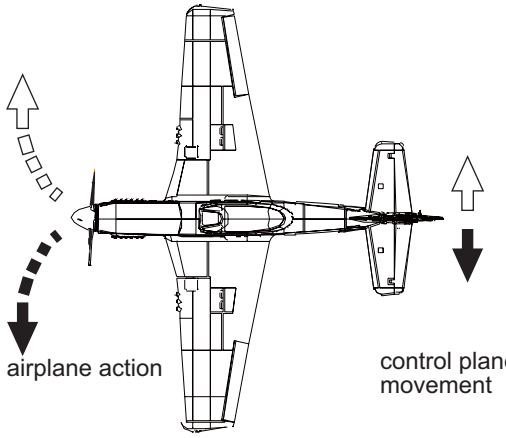
ELEVATOR		
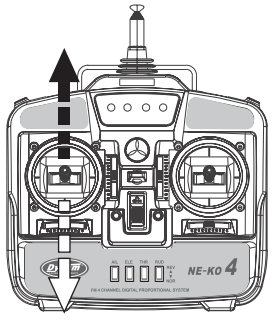	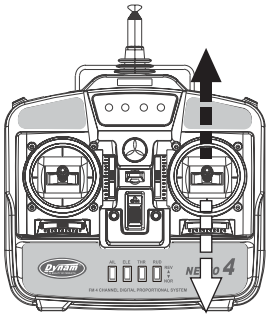	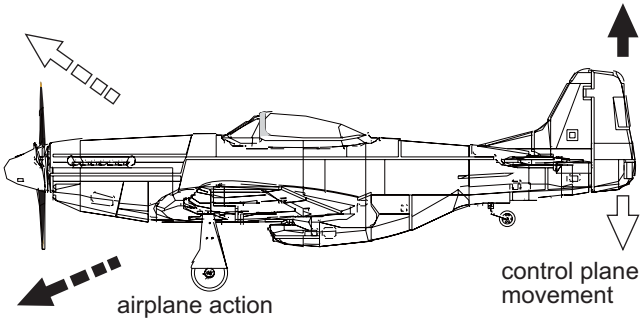
AILERONS		
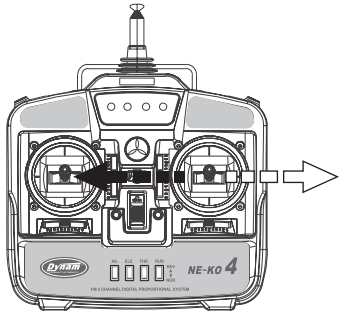	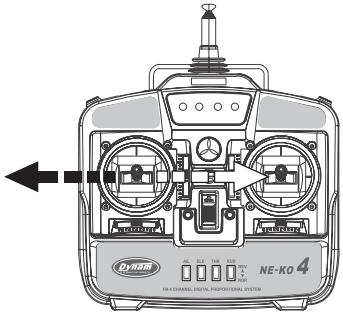	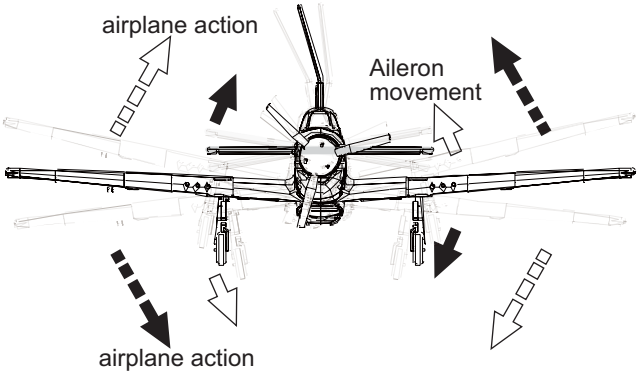

CG And Receiver Assembling

The ideal C.G. position is 70~75mm behind the leading edge measured at where the wing meets the fuselage. In order to obtain the C.G. specified, add weight to the fuselage or move the battery position. Check the C.G. before flying.

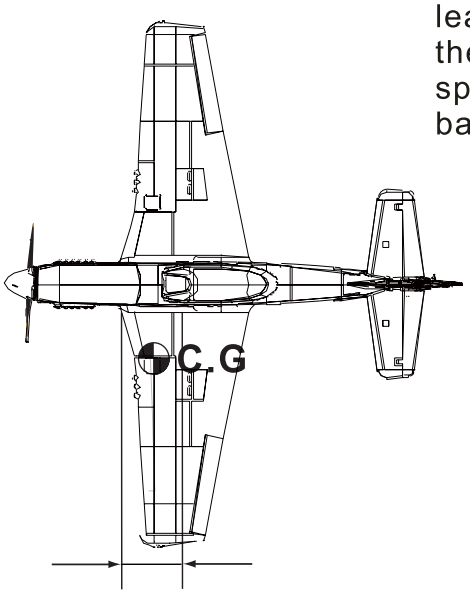

70-75mm
Center of gravity

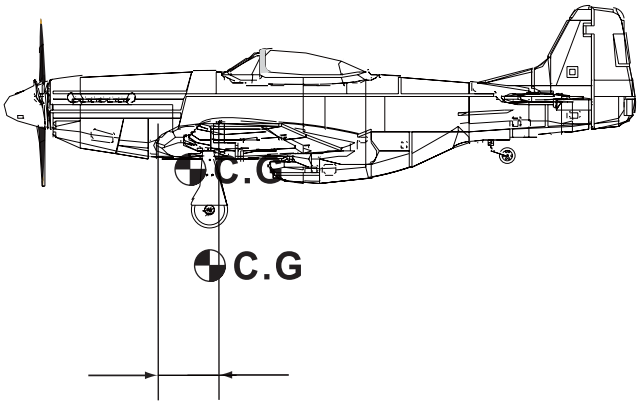

70-75mm
Center of gravity

SUGGEST CONTROL THROW SETTING

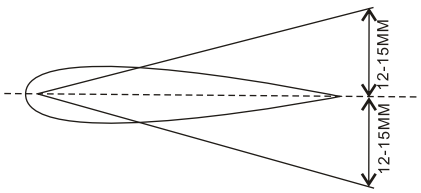

ELEVATOR

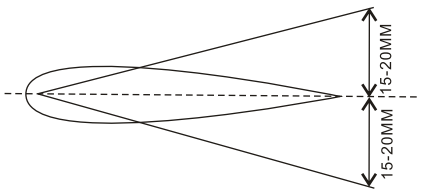

AILERON

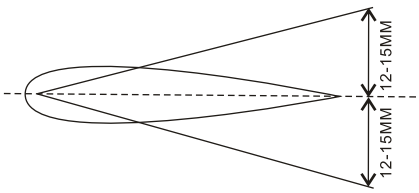

RUDDER

